FIRST ANGLE PROJECTION

(ALL DIMENSIONS ARE IN mm)

DRG. NO. 0 203 01 20205

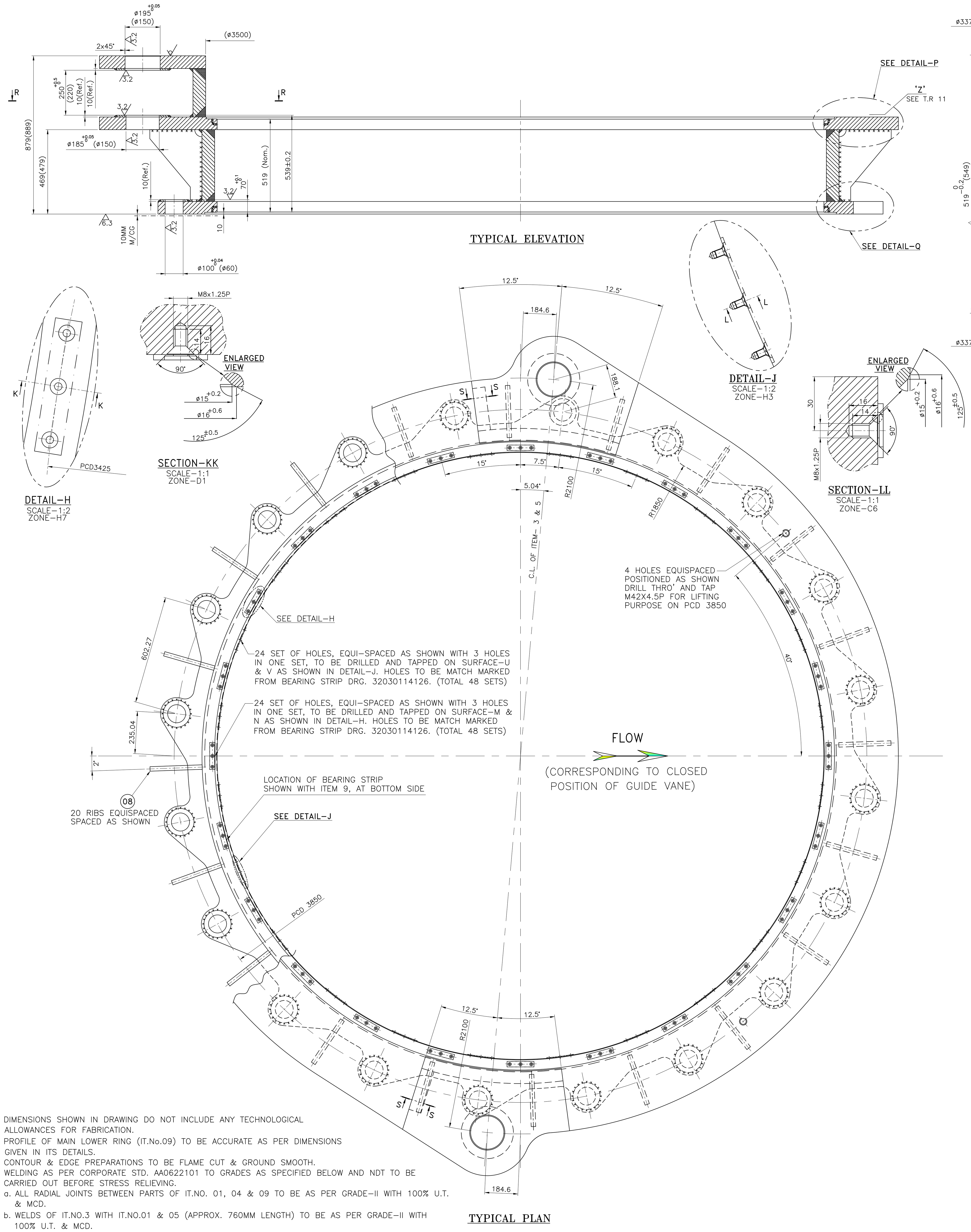

TYPICAL PLAN

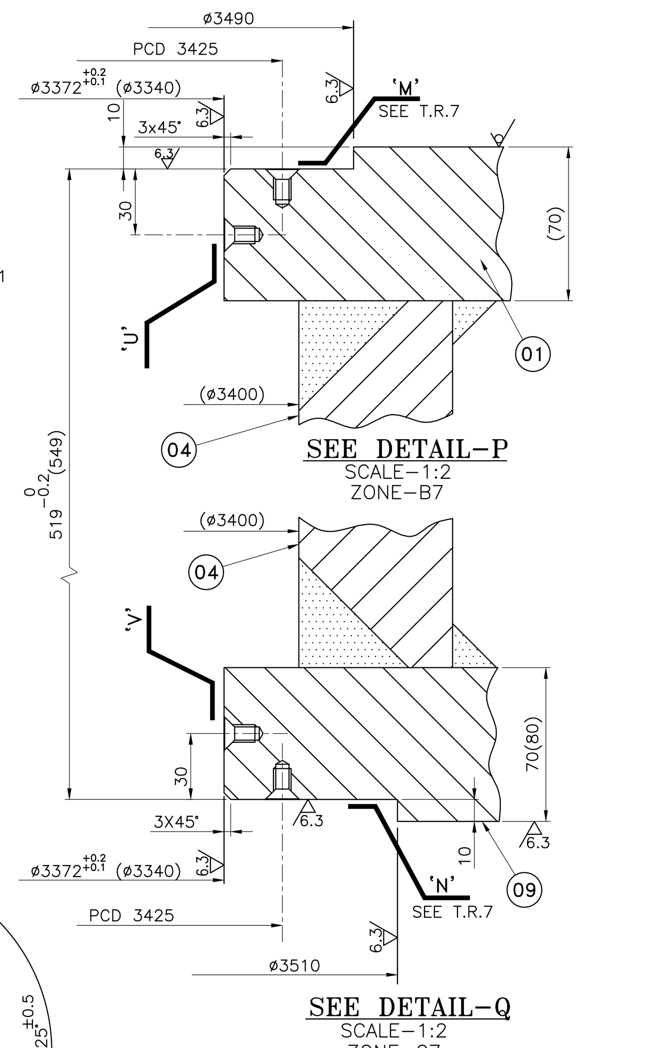

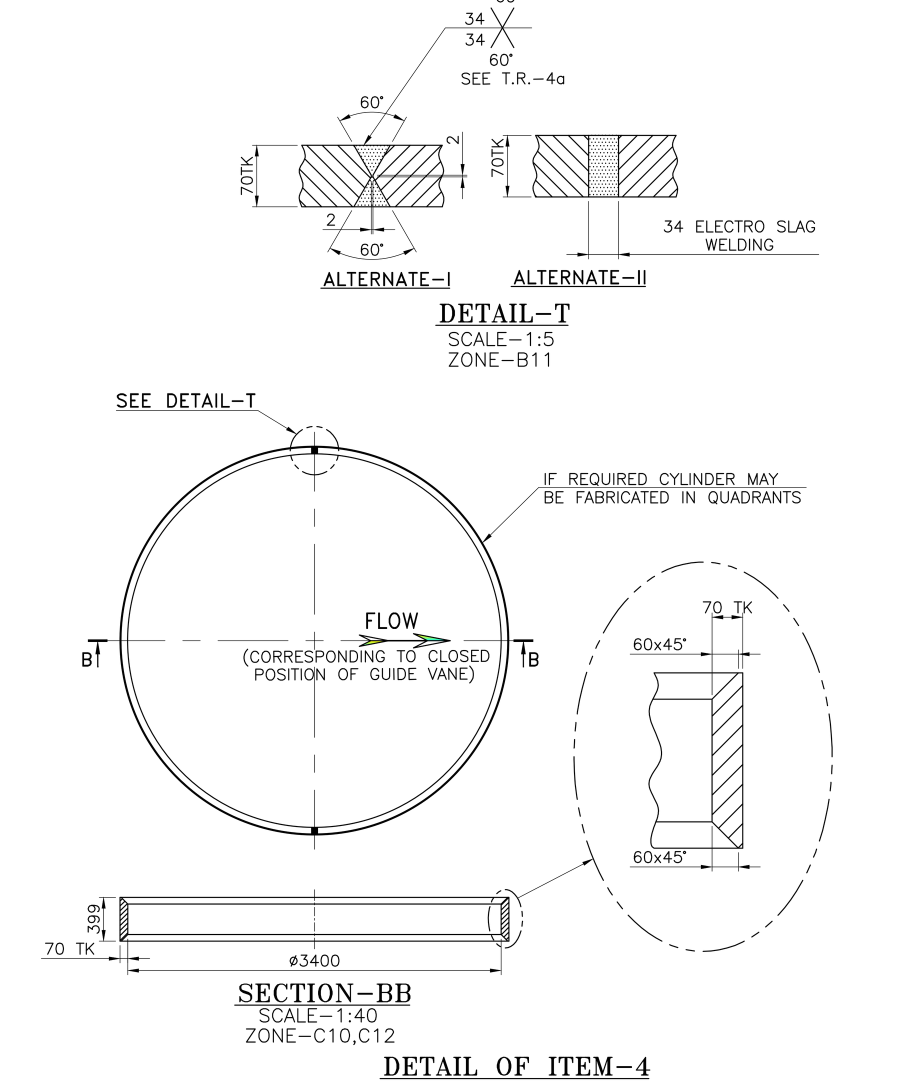

DETAIL OF ITEM-4

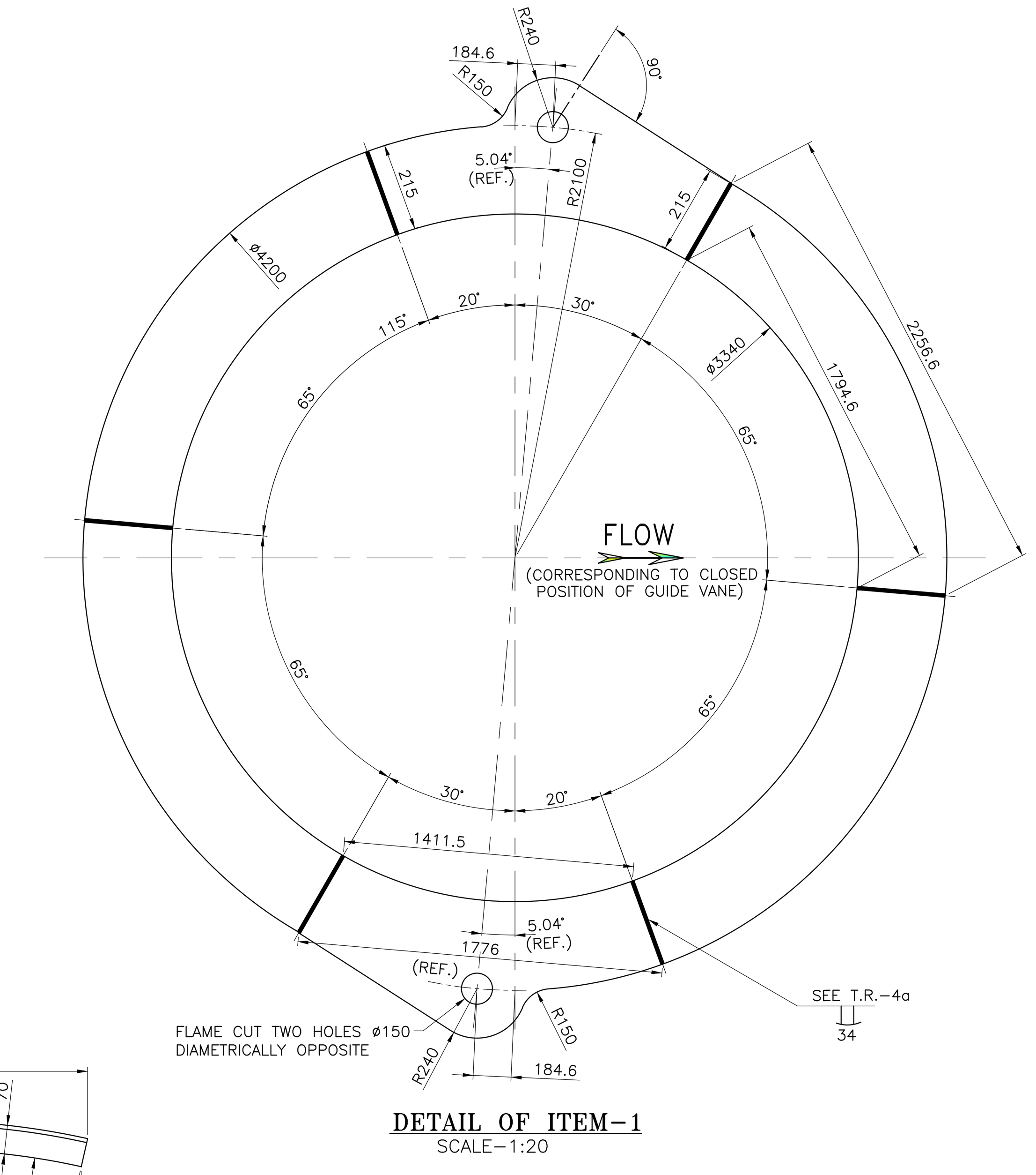

DETAIL OF ITEM-1
SCALE-1:20

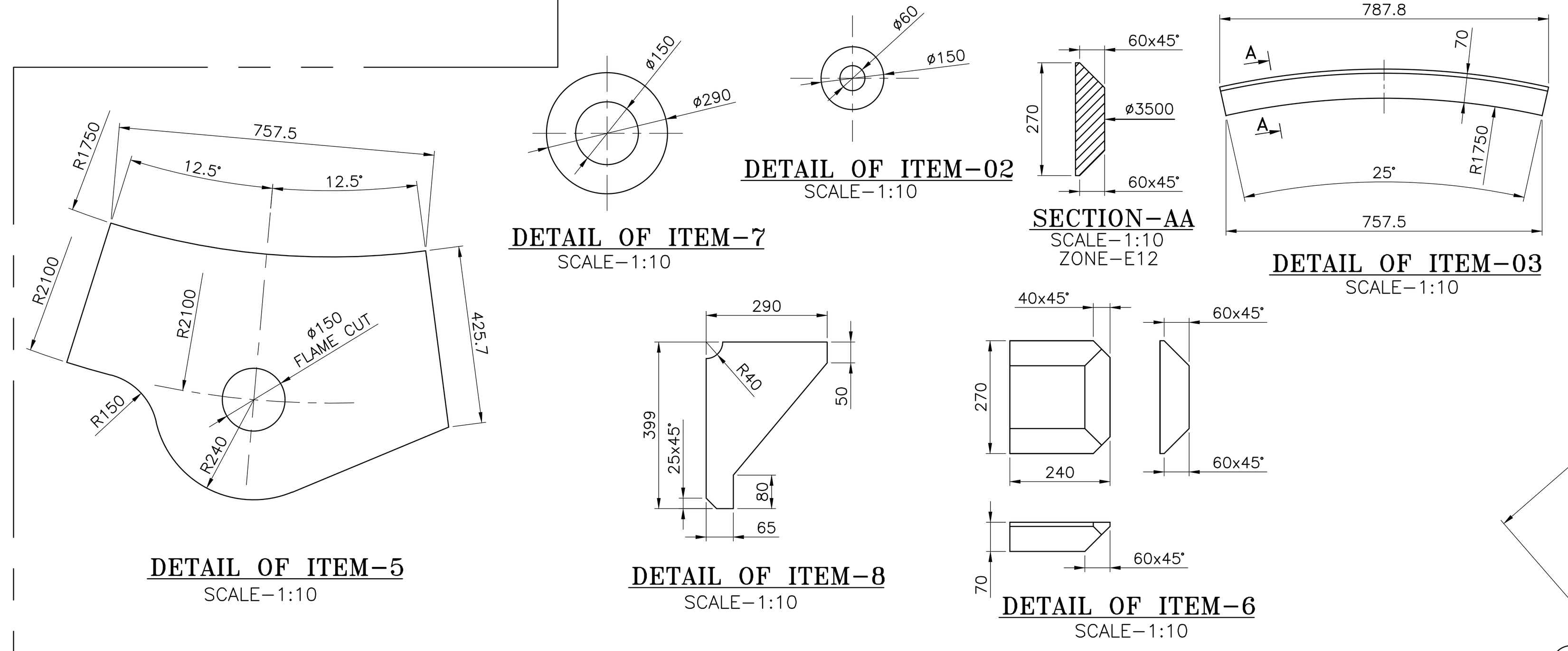

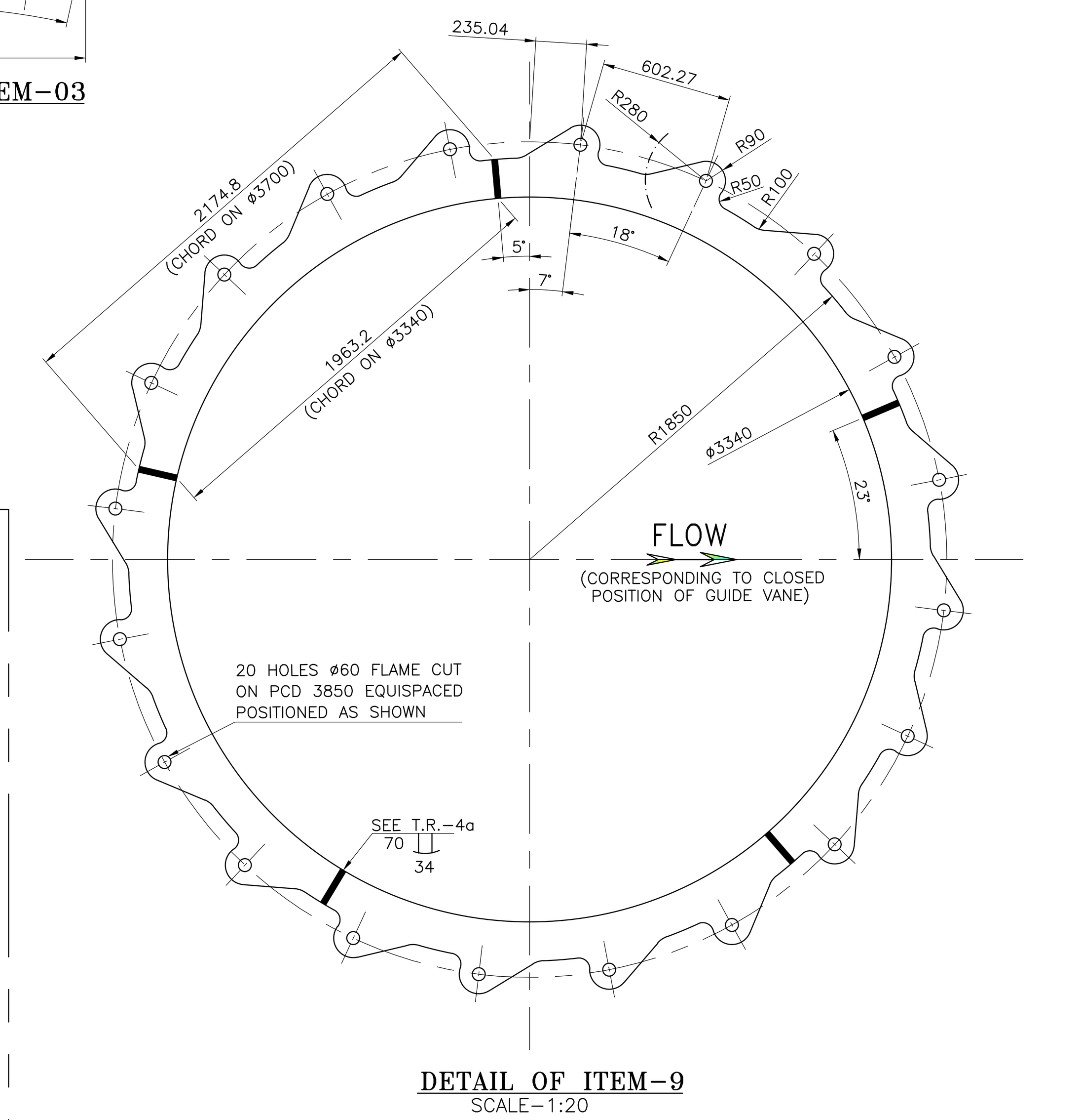

DETAIL OF ITEM-9
SCALE-1:20

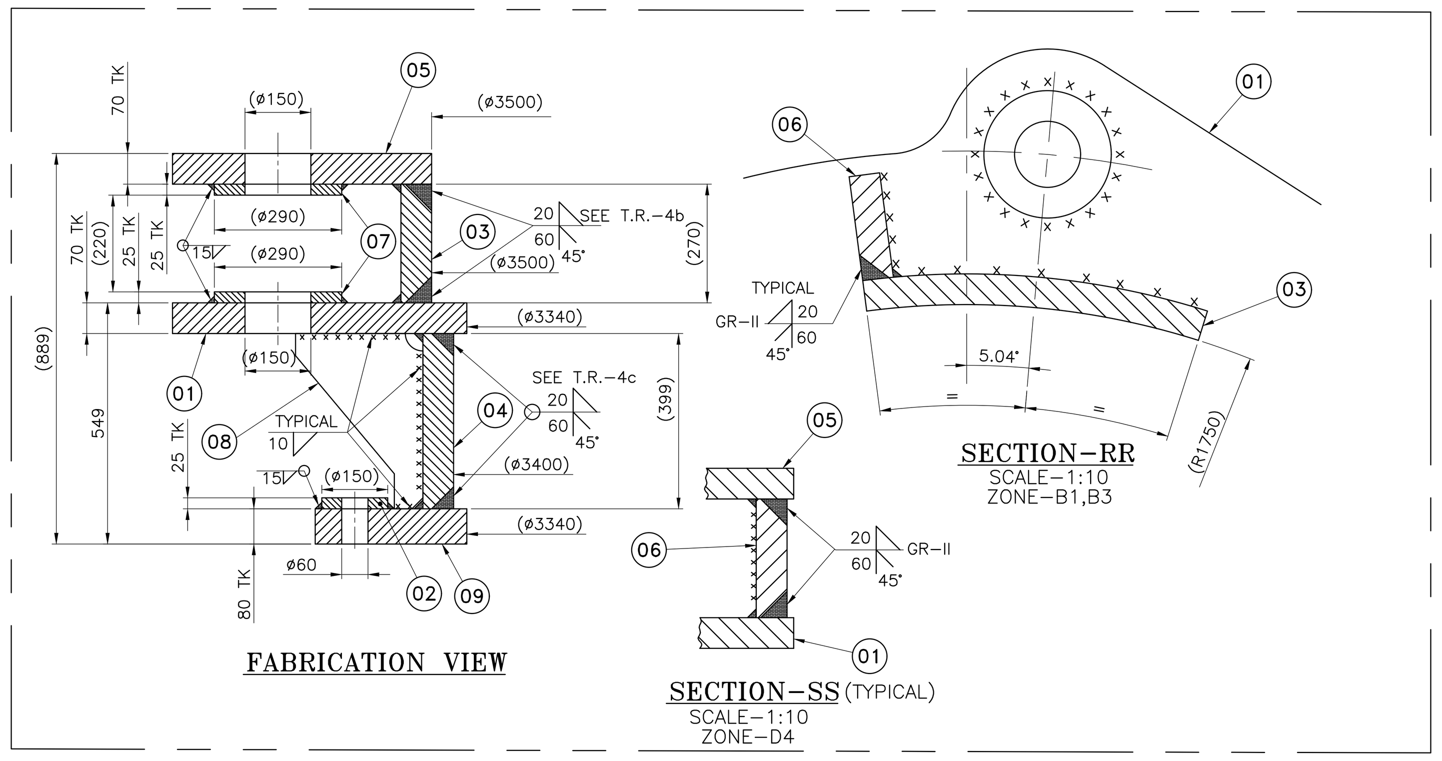

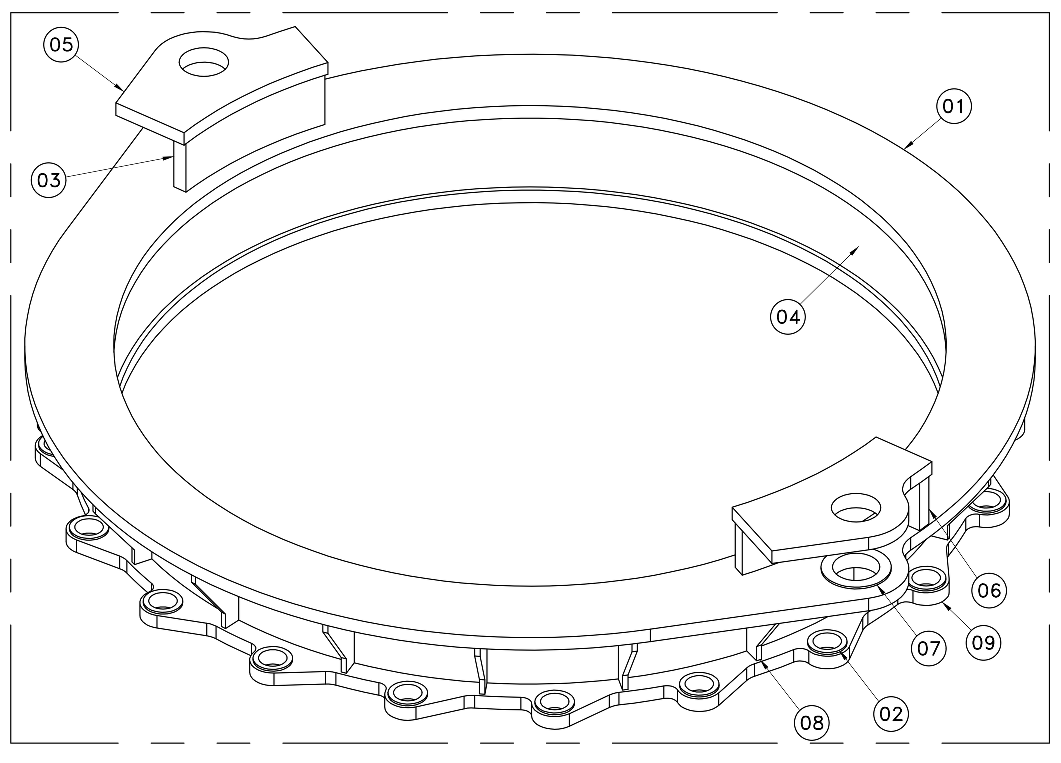

ISOMETRIC VIEW- REG. RING FAB

1. DIMENSIONS SHOWN IN DRAWING DO NOT INCLUDE ANY TECHNOLOGICAL ALLOWANCES FOR FABRICATION.
2. PROFILE OF MAIN LOWER RING (IT.No.09) TO BE ACCURATE AS PER DIMENSIONS GIVEN IN ITS DETAILS.
3. CONTOUR & EDGE PREPARATIONS TO BE FLAME CUT & GROUND SMOOTH.
4. WELDING AS PER CORPORATE STD. AA0622101 TO GRADES AS SPECIFIED BELOW AND NDT TO BE CARRIED OUT BEFORE STRESS RELIEVING.
   a. ALL RADIAL JOINTS BETWEEN PARTS OF IT.NO. 01, 04 & 09 TO BE AS PER GRADE-II WITH 100% U.T. & MCD.
   b. WELDS OF IT.NO.3 WITH IT.NO.01 & 05 (APPROX. 760MM LENGTH) TO BE AS PER GRADE-II WITH 100% U.T. & MCD.
   c. WELDS OF IT.NO.04 WITH IT.NO.01 & 09 TO BE AS PER GRADE-II.
   d. EXTENT OF EXAMINATION BY U.T. FOR PARTIAL PENETRATION WELD SHALL BE WELD SIZE-5mm.
   e. ALL FILLET WELDS TO BE AS PER GRADE-III.
5. STRESS RELIEVING TO BE DONE AS PER BHEL STD. BP 0640299.
6. REMOVE ALL BURRS & SHARP EDGES.
7. NON PERPENDICULARITY OF SURFACE 'M' &'N' TO $ø3372^{+0.2}_{+0.1}$ NOT TO BE MORE THAN 0.03.
8. NON-COAXIALITY OF HOLES $ø195^{+0.05}_{0}$ & $ø185^{+0.05}_{0}$ NOT TO BE MORE THAN 0.03.
9. SURFACE 'U', SURFACE 'V', AXIS OF $ø195^{+0.05}_{0}$, $ø185^{+0.05}_{0}$, $ø100^{+0.04}_{0}$ HOLES ARE TO BE PARALLEL TO AXIS WITHIN 0.05.
10. PAINT & PROTECT AS PER PROCESS SPEC.. HT 00005.
   a. ALL MACHINED SURFACES CAT-G.
   b. ALL UNMACHINED SURFACES TO CAT-F.
11. FLOW LINE TO BE MARKED ON SURFACE-Z, FOR LOCATION AND INSTALLATION AT SITE.
12. FABRICATION WEIGHT=8092.0 KG.

VAR.OO	REMARKS	VAR NO.	ITEM NO.	DESCRIPTION	STD.	DRAWING NO.	MATL. CODE / MATL. SPCN.	A/C	UNIT	UNIT WT. / QTY.	GS	ZONE
	80 THICK		009	LOWER MAIN RING (IN 5 PARTS)		SEE DETAIL	AA1011819260 / AA10119			1682.0 / 001		
	25 THICK		008	RIB		SEE DETAIL	AA1011819155 / AA10119			12.93 / 020		
	25 THICK		007	BOSS-2		SEE DETAIL	AA1011819155 / AA10119			9.49 / 004		
	70 THICK		006	SIDE PLATE		SEE DETAIL	AA1011819244 / AA10119			35.60 / 002		
	70 THICK		005	TOP ANCHOR PLATE		SEE DETAIL	AA1011819244 / AA10119			218.10 / 002		
	70 THICK		004	CYLINDER (IN HALVES)		SEE DETAIL	AA1011819244 / AA10119			2390.0 / 001		
	70 THICK		003	RADIAL PLATE		SEE DETAIL	AA1011819244 / AA10119			115.55 / 002		
	25 THICK		002	BOSS-1		SEE DETAIL	AA1011819155 / AA10119			2.91 / 020		
	70 THICK		001	UPPER RING (IN SIX PARTS)		SEE DETAIL	AA1011819244 / AA10119			2927.0 / 001		

28 → CARD TYPE-3 | 28 → CARD TYPE-1 | 28 → CARD TYPE-2

ADDITIONAL INFORMATION

STATUS OF DRAWING 'U'

DISTRIBUTION OF PRINTS
HTE-2, WTM(P)-1, WTM(S)-4
FGM - 7, THX - 1

TYPE OF PRODUCT OR NAME OF CUSTOMER/PROJECT: PALAMURU RANGAREDDY LIS STAGE-III (9x145 MW)

BHARAT HEAVY ELECTRICALS LTD. BHOPAL

	NAME	SIGN	DATE
DRN	AB/NZM		26.04.17
CKD	ND		26.04.17
APPD	SK		26.04.17

NO. OF VAR. –

REV.	DATE	ALTERED / CHECKED / APPD.	
01	08.09.2020	ALTERED UK / CHECKED ND / APPD. SK	T.R. 4 UPDATED AS PER FEEDBACK OF FGM.

DEPT. H.T.E. | CODE 402 | UNTOL. DIMS. GR. 32000049014 | SCALE 1:10 & AS STATED | WEIGHT(K.G.) 7575 | REF.TO ASSY.DRG. 0 203 01 20201 | ITEM NO. 004 | NO.OF ITEM 009

TITLE: REGULATING RING

DRAWING NO. 0 203 01 20205 | REV. 01

SHT. NO. 01 | NO. OF SHT. 01

A0 SIZE

THE INFORMATION ON THIS DOCUMENT IS THE PROPERTY OF BHARAT HEAVY ELECTRICALS LIMITED. IT MUST NOT BE USED DIRECTLY OR INDIRECTLY IN ANY WAY DETRIMENTAL TO THE INTEREST OF THE COMPANY.

INVENTORY NO. | SIGN. & DATE | REF. DRG. NO.